INSIGHT™

RETRACTOR SYSTEM

Surgical Technique

Access system for the posterior thoracolumbar spine

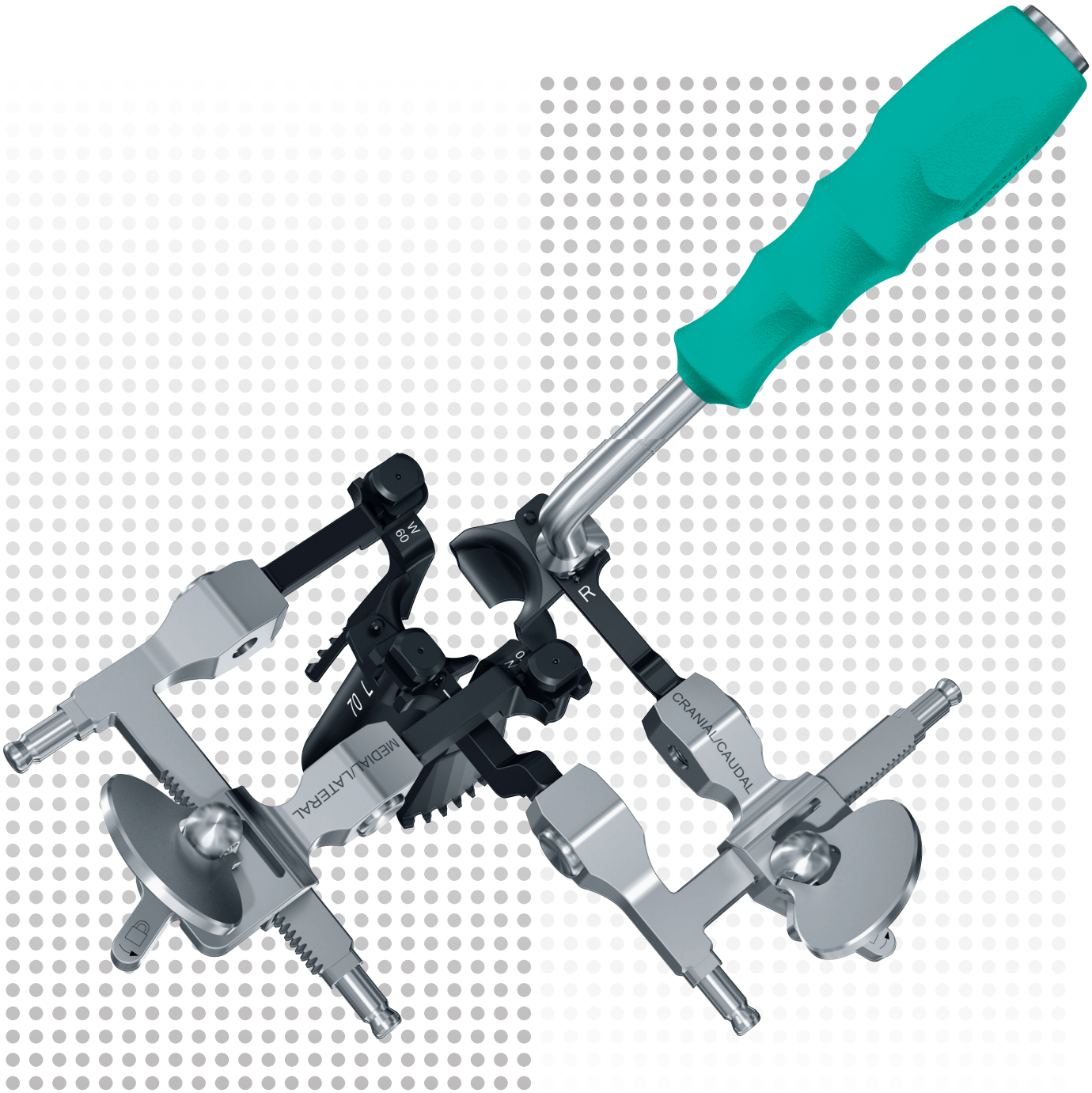

DePuy Synthes
THE ORTHOPAEDICS COMPANY OF Johnson & Johnson

Image Intensifier Control

▲ Warnings

This description alone does not provide sufficient background for direct use of DePuy Synthes products. Instruction by a surgeon experienced in handling these products is highly recommended.

Processing, Reprocessing, Care and Maintenance

For general guidelines, function control and dismantling of multi-part instruments, as well as processing guidelines for implants, please contact your local sales representative or refer to:

http://emea.depuysynthes.com/hcp/reprocessing-care-maintenance

For general information about reprocessing, care and maintenance of Synthes reusable devices, instrument trays and cases, as well as processing of Synthes non-sterile implants, please consult the Important Information leaflet (SE_023827) or refer to:

http://emea.depuysynthes.com/hcp/reprocessing-care-maintenance

Table of Contents

For product catalog contact your local DePuy Synthes representative

INSIGHT™ Retractor System

Features

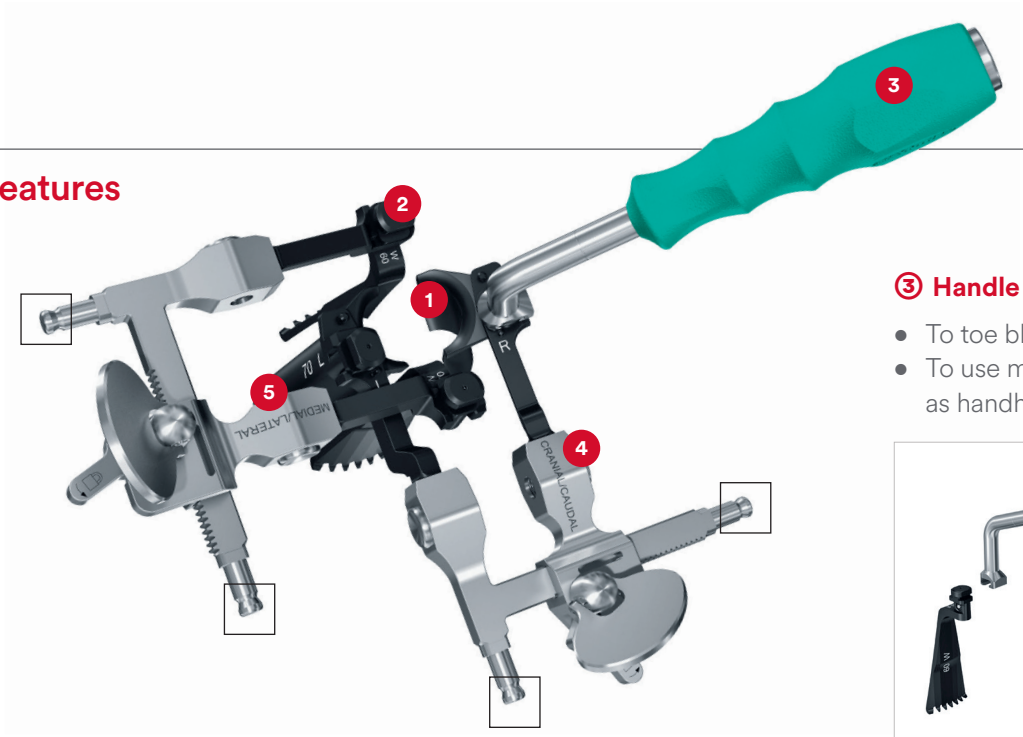

③ Handle

- To toe blades
- To use medial/lateral blades as handheld retractor

Blades

- Aluminum
- Black, coating

① Cranial/Caudal blades

- Left (L) and right (R) configuration
- Length 40–100mm in 10mm increments
- Round shape to slide over dilator

② Medial/Lateral blades

- Wide (W) and narrow (N) configuration
- Length 40–110mm in 10mm increments
- Teeth

Frames

- Both frames can be table mounted at two points
- Expansion step 1.5 mm per click
- Blade angulation from 0°–30° in 10° increments

④ Cranial/Caudal Frame

- Fits under medial/lateral frame
- 2 possible connections to Flex Arm

⑤ Medial/Lateral Frame

- Fits over cranial/caudal frame
- 2 possible connections to Flex Arm

Also available is the INSIGHT™ Tubular Retractor System.

AO Spine Principles

The four principles to be considered as the foundation for proper spine patient management underpin the design and delivery of the Curriculum: Stability, Alignment, Biology, Function.[1,2]

AO Principles

1.

Stability

Stabilization to achieve a specific therapeutic outcome.

2.

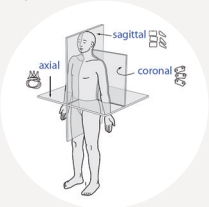

Alignment

Balancing the spine in three dimensions.

3.

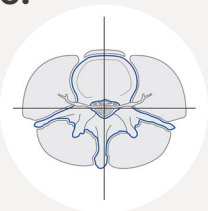

Biology

Etiology, pathogenesis, neural protection, and tissue healing.

4.

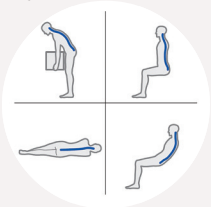

Function

Preservations and restoration of function to prevent disability.

Preparation

1. Patient positioning

The patient is placed in a prone position. To facilitate intra-operative exposure of the posterior disc space, the spine can be flexed.

- If a fusion procedure is being performed ensure the spine is returned to the physiological position before inserting trials and implants.

2. Set up MIS Support System

MIS Support System	
387.346	SynFrame Holding Base, insulated, for OR Table, dark blue
387.343	SynFrame Guiding Tube, for Angled Rod No. 387.344, for Basic System
03.612.012	Flex Arm – SynFrame Connection
03.612.010	Flex Arm

When working through a retractor system, table mounting is very important. Therefore always use the INSIGHT Retractor in combination with the MIS support system which securely fixes the INSIGHT Retractor to the OR table.

2a. Secure holding base

Install the holding base on the operative table by sliding in along a guide rail from the rail end. “TOP” must be visible on the clamp surface. Tighten the knob to secure it to the rail at the desired location.

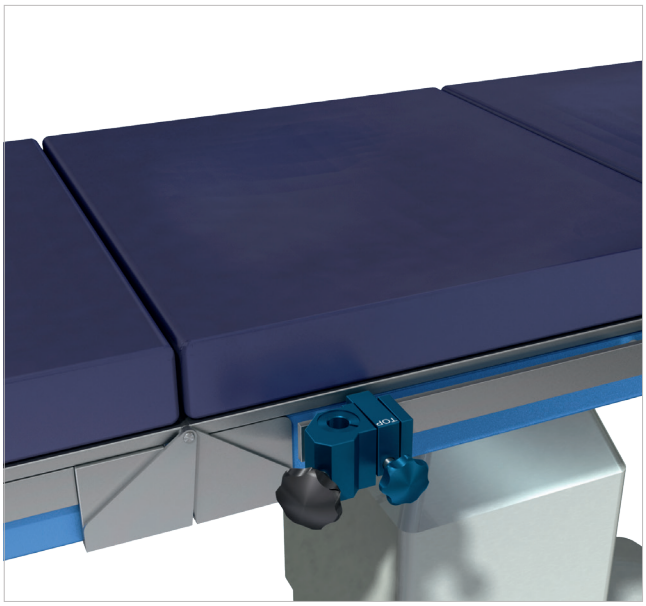

2b. Insert guiding tube into holding base

Insert a guiding tube into the holding base and lock it in place with the tightening knob.

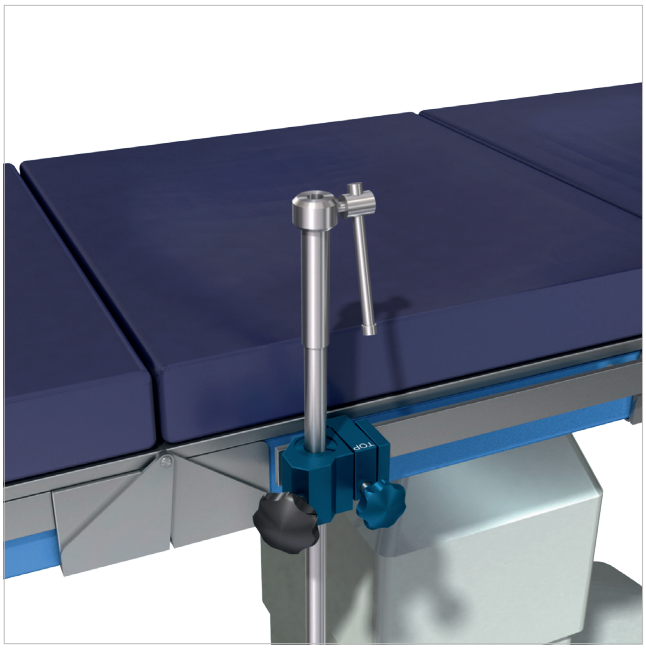

2c. Insert flex arm bridge into guiding tube

Insert the tapered end of the flex arm bridge into the holding sleeve of the guiding tube until the desired shaft length is exposed.

Once the desired height is achieved, lock in place by using the clamp handle.

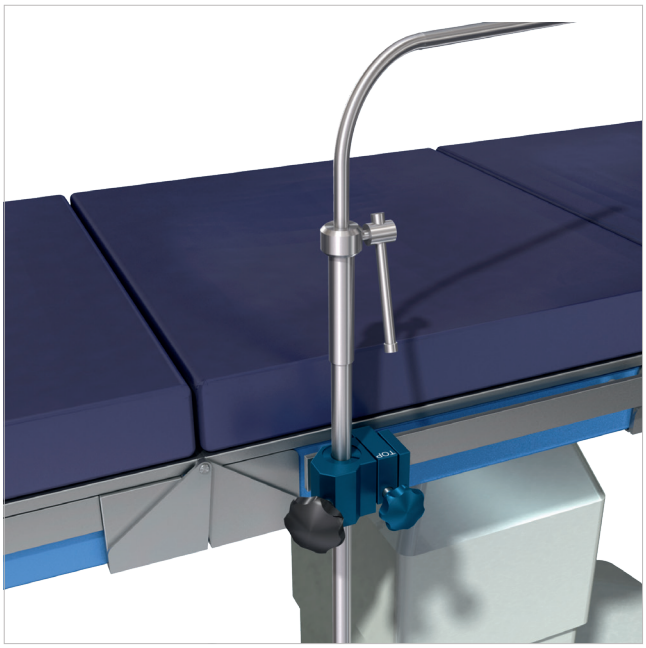

2d. Attach flex arm to flex arm bridge

Slide the flex arm clamp into the flex arm bridge. Turn the clamp knob clockwise to tighten the flex arm clamp.

- Two flex arms may be used simultaneously on one Flex Arm – SynFrame Connection.

▲ Precaution:

Flex arm tension should be fully released after each use to prevent instrument damage and allow proper instrument sterilization.

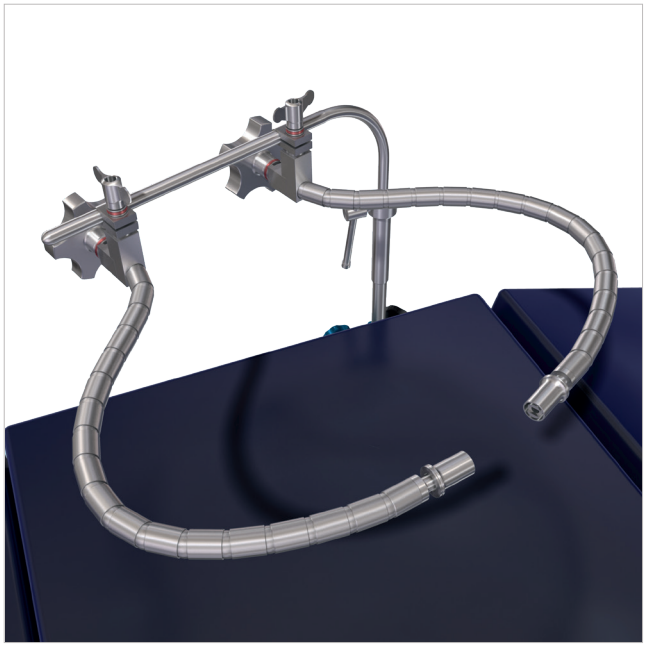

Table Fixed Retraction

1. Approach the spine

The mini-open approach uses a paramedian incision made through the skin and fascia approximately 2–4 cm from the midline. This allows muscle splitting within the multifidus and longissimus cleavage plane.

Determine the location of the skin incision using anatomic landmarks or radiographic imaging. Create an incision. The incision length should be at least 19 mm (initial opening of retractor). Then cut through the subcutaneous tissue and make a fascial incision of the same length.

2. Insert dilators

2a. Insert one step dilator

Instruments	
03.610.008	Dilator for INSIGHT (Ø=19 mm)

Position the dilator for INSIGHT Retractor in the incision and advance it down to the posterior elements of the spine while controlling the position under fluoroscopy.

▲ Warning:

Carefully monitor the position of the dilator during dissection and placement to avoid injury to the nerve root and other deeper structures.

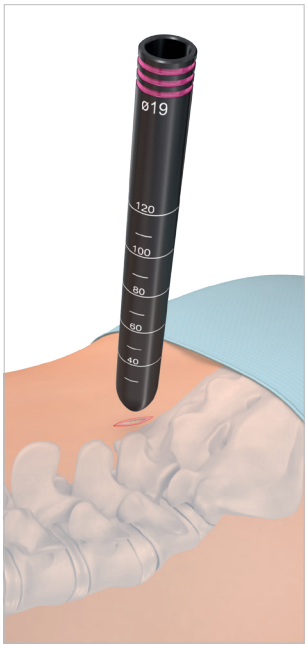

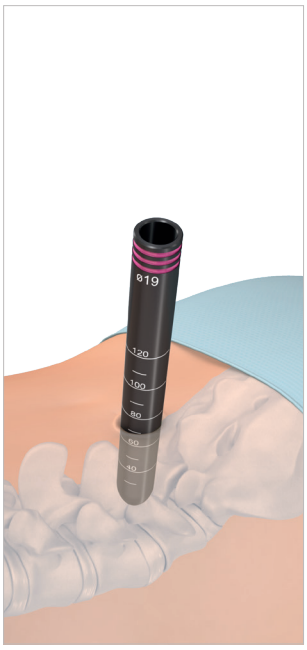

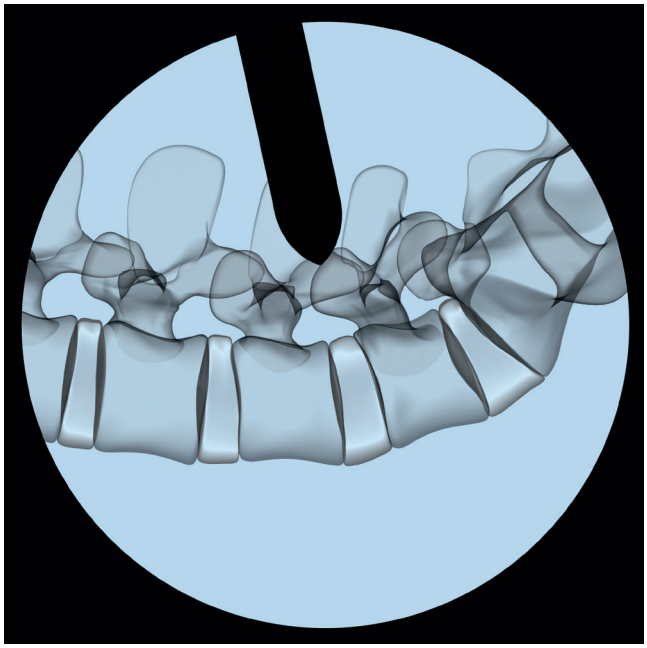

2b. Insert Kirschner wire and dilate incision

02.606.001	Kirschner Wire Ø 1.6 mm with trocar tip, length 480 mm, Stainless Steel
02.606.003	Kirschner Wire Ø 1.6 mm without trocar tip, length 480 mm, Stainless Steel

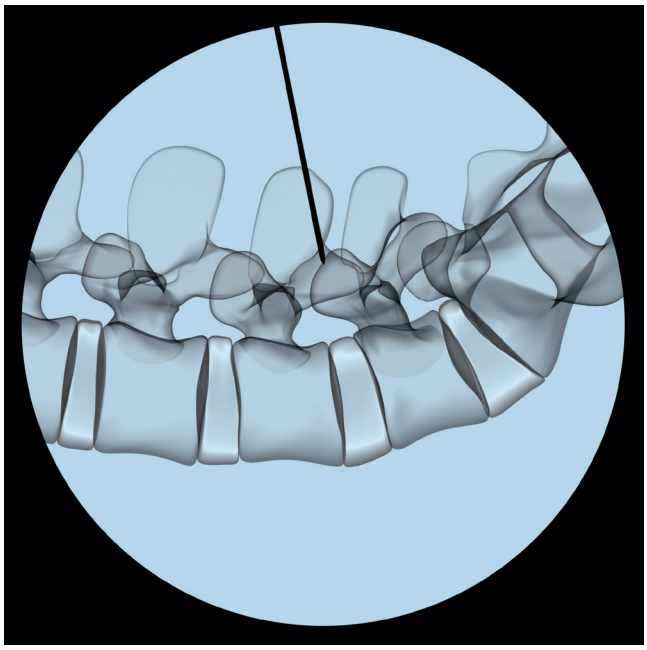

Position the Kirschner Wire in the incision and advance it carefully while controlling the position under fluoroscopy. Fix the Kirschner Wire in the bony structure where you plan to do the minimally invasive procedure.

▲ Warning:

Ensure the Kirschner Wires remain securely in position throughout the entire duration of the procedure until adequate dilation has been achieved. The tip of the Kirschner Wire should be monitored by fluoroscopy to ensure it does not slip off the bony structures (e.g. facet joint) and penetrate the dura or the nerve root.

▲ Warning:

Ensure the Kirschner wire does not slip out before the retractor is in place. The Kirschner wire is long enough to be held in place by hand during soft tissue dilation.

Instruments

03.610.001	Dilator Ø 1.8/10.0 mm, cannulated, for Guide Wire Ø 1.6 mm
Color of ring mark: light blue	
03.610.002	Dilator Ø 10.0/13.0 mm, for No. 03.610.001
Color of ring mark: yellow	
03.610.003	Dilator Ø 13.0/16.0 mm, for No. 03.610.002
Color of ring mark: white	
03.610.004	Dilator Ø 16.0/19.0 mm for No. 03.610.003
Color of ring mark: violet	

Insert the the 1.8/10.0 mm dilator (light blue) over the Kirschner wire. Continue dilation placing the 10.0/13.0 mm dilator (yellow) over the 1.8/10.0 mm dilator. Then place the next dilator over each other, until insertion of 16.0/19.0 mm (violet) dilator.

The retractor has the starting diameter of 19 mm and will fit over the violet dilator.

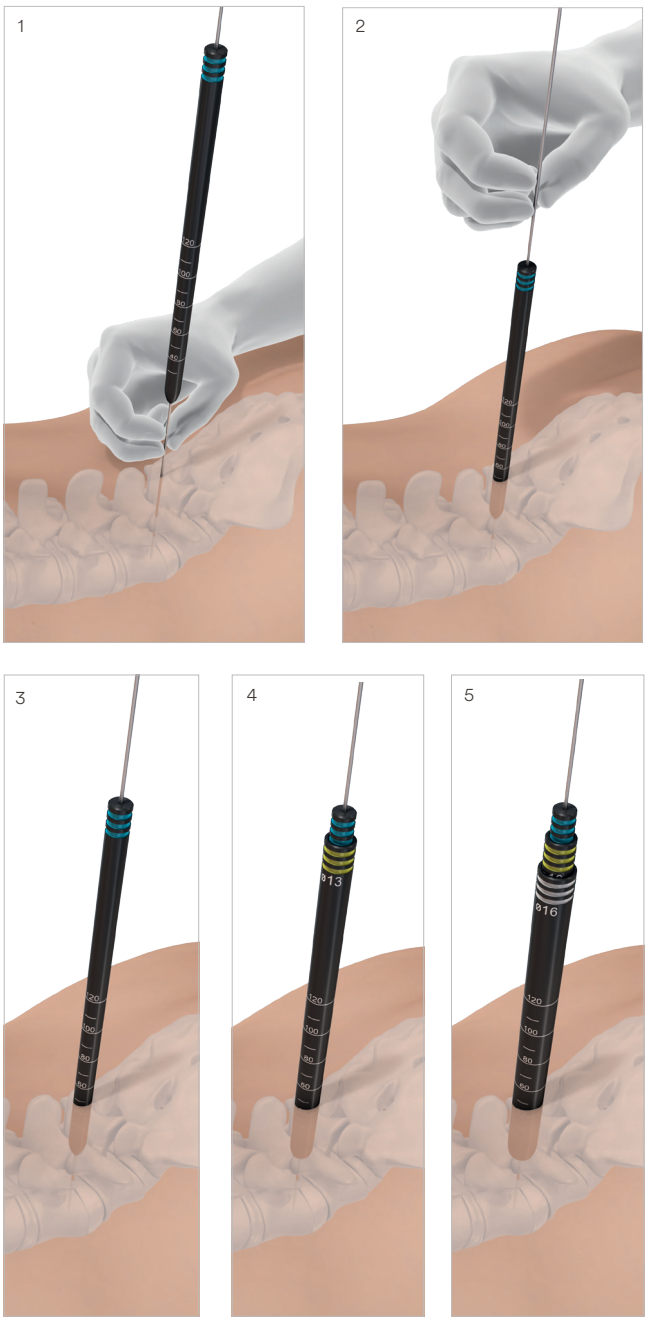

3. Choose blade length

Instruments	
03.615.300–390	Blade, cranial/caudal, left, length 40–100 mm
03.615.400–490	Blade, cranial/caudal, right, length 40–100 mm

Etched markings on the dilators indicate the length of the appropriate blades. The soft tissue coverage can vary between 40–100 mm.

Choose one right and one left blade with the length corresponding to skin level on the dilator.

Use the shortest allowable blades to access the posterior bony structures of the spine for less impact on instrument mobility.

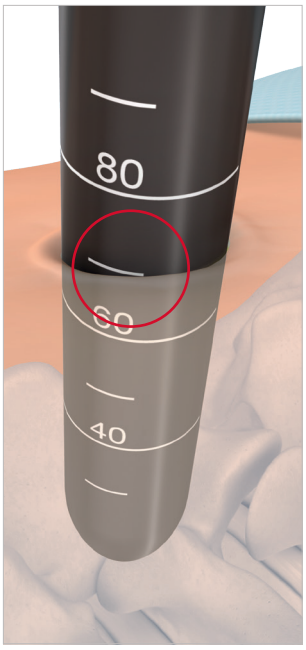

4. Assemble cranial/caudal retractor

Instrument	
03.615.100	Retractor Frame, cranial/caudal

To assemble the frame, set the switch to unlock (1) and slide the moving part (2) over the L-piece of the INSIGHT Retractor. Make sure, the cutout on the black arm faces outward.

Attach the selected cranial/caudal blades to the cranial/caudal retractor by clipping them into the cutout on the black arms so the two blades form a tube.

- The blades are etched with the letters L or R for left and right orientation, and should match with the L or R etchings on the retractor frame.

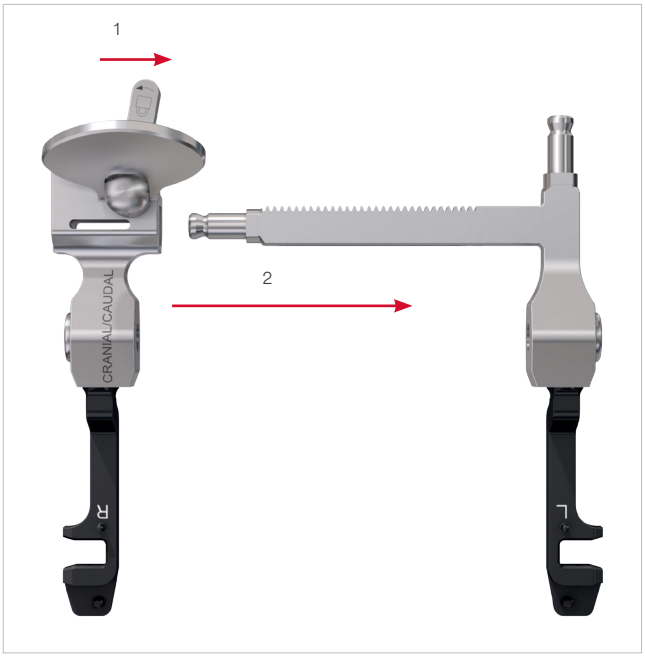

5. Insert cranial/caudal retractor

Insert the cranial/caudal retractor over the dilator for INSIGHT Retractor or over the 19 mm dilator if stepwise dilation is used.

- For less impact on instrument mobility, mount the frame with the ratcheting mechanism (metal part) away from the surgeon. If on the contralateral side another retractor or percutaneous screw system is used, mount the frame with the silver part towards the surgeon.

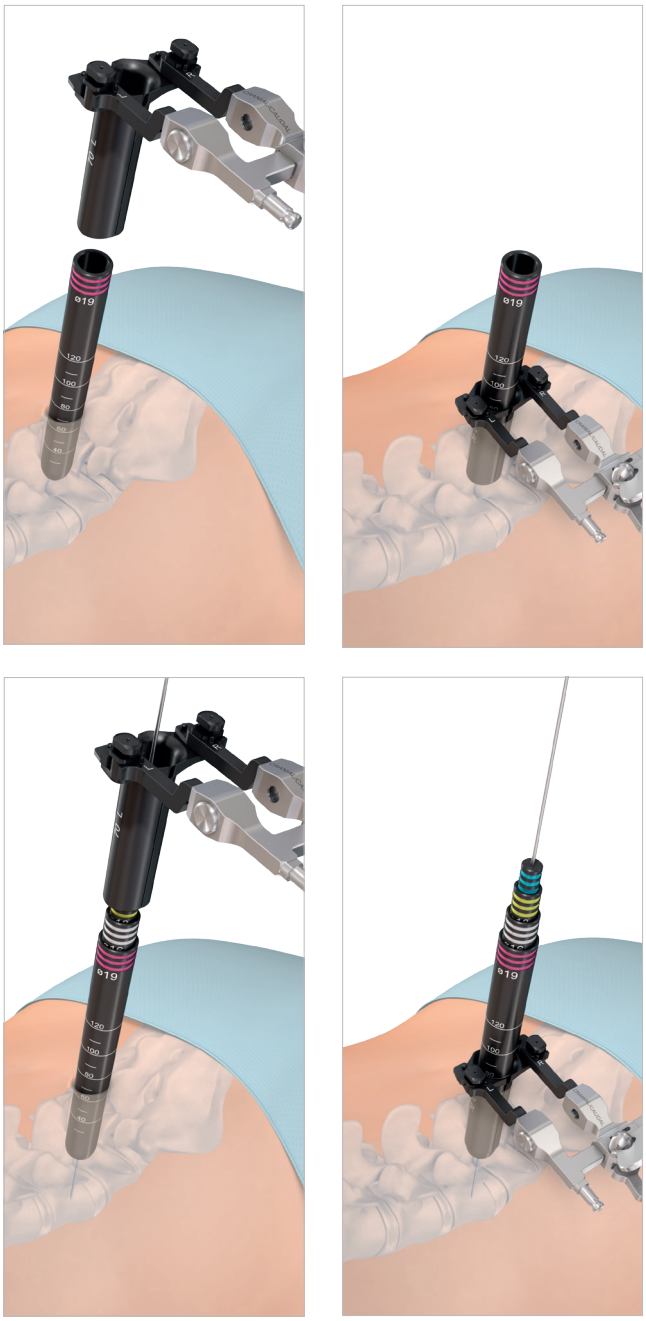

6. Connect frame assembly to flex arm

Connect the cranial/caudal frame to the flex arm by pulling back the coupling on the flex arm and insert the Hudson connector of the retractor.

Correct the position of the retractor if needed and turn the tension knob on the flex arm until it is secure.

To reposition the retractor, release the flex arm tension by loosening the tension knob. Place the retractor in the desired position and then retighten the tension knob.

Remove the dilator for INSIGHT Retractor or all dilators and the Kirschner wire, once the flex arm is tightened.

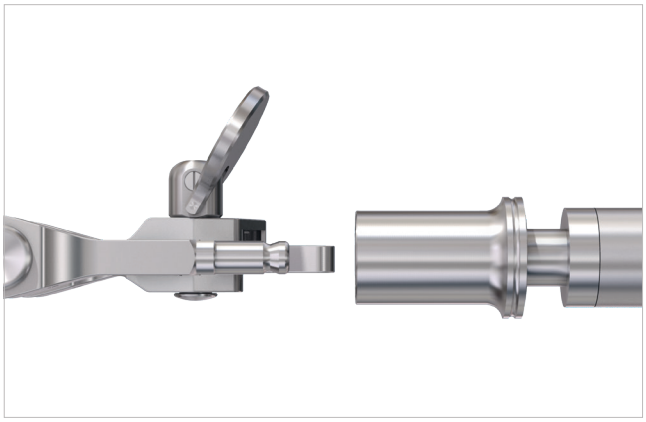

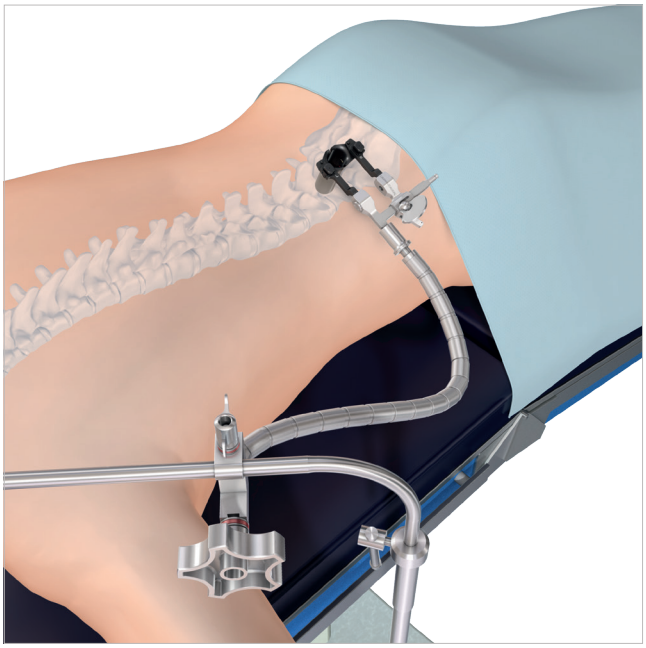

7. Expand cranial/caudal retractor

When the retractor is inserted, ensure the switch (1) is in the locked position. In this position the ratcheting mechanism is engaged and the retractor cannot be expanded. Then turn the knob (2) counterclockwise and expand the retractor. The ratcheting mechanism allows for 1.5 mm distraction steps with every click.

In case the flex arm is attached on the Hudson connector which is in-line with the black arm, the total distraction of the retractor is 50 mm. If the flex arm is attached to the other Hudson connector, the total distraction of the retractor is 40 mm.

A full turn of the knob expands the retractor by 1.5 cm.

To close the retractor, put the switch in the open position, which will release the ratcheting mechanism and the retractor can be slid back to starting position.

▲ Warning:

If it is not possible to expand the retractor, make sure the skin and fascia cut is large enough and if not, enlargement may be necessary. Make sure the switch is in the locked position.

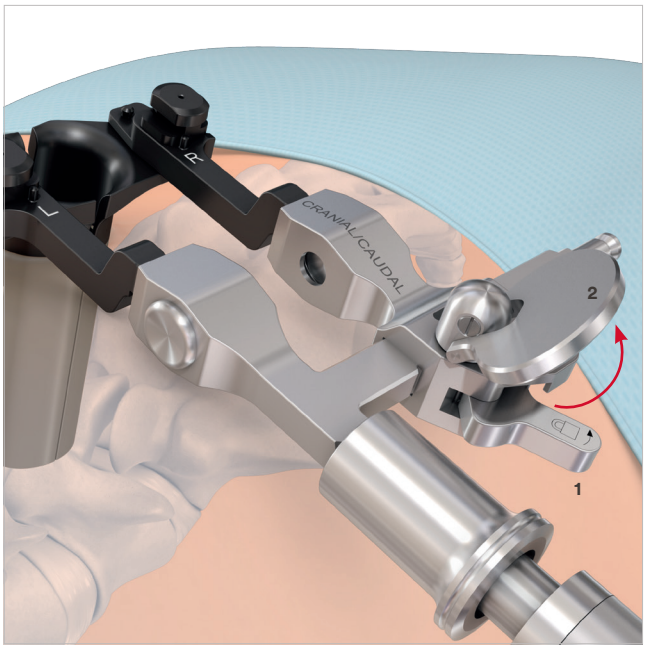

8. Insert retractor light clip (optional)

Instruments	
03.612.031	Fibre Optic Cable for Light Strip
03.615.004S	Light Clip for Insight Retractor, sterile

To use the insight retractor light clip, a separate light source with an ACMI adaptor is required.

Connect the fibre optic cable to an ACMI compatible light source.

Place the blue circle of the light clip over the protrusion of the cranial/caudal retractor frame. Slide the light clip until it snaps into the protrusion.

Insert the light clip cable into the end of the fibre optic light cable. Turn on the light source.

9. Toe cranial/caudal retractor blades

Instrument	
03.615.003	Handle for Retractor
Optional Instrument	
03.615.005	Handle for Retractor, with wide Angle

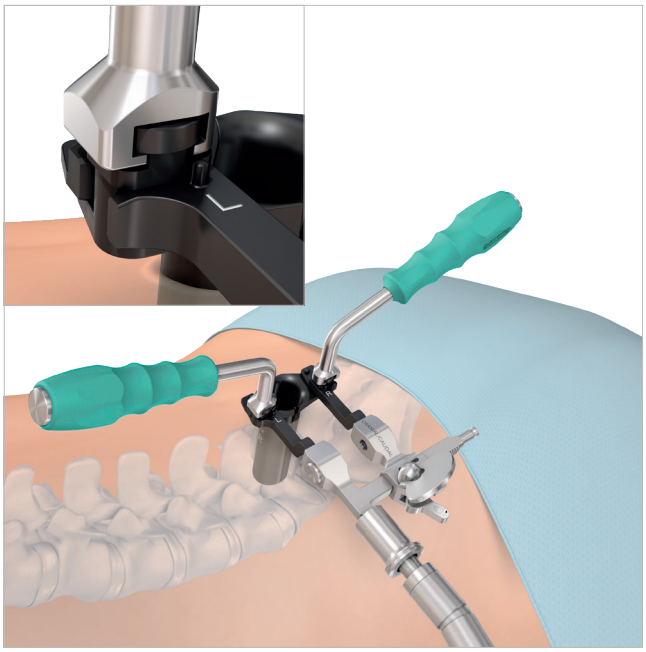

Attach the handle to the retractor by sliding it over the connection piece on the blade.

Toe the blades of the cranial/caudal retractor by angling upwards the handle. Both blades can be toed in 10° steps up to 30°.

Remove the handle by sliding it off the blades. If further angulation of the blades is needed, the handle can be reattached.

Optionally the retractor handle with wide angle may also be used if the common retractor handle does not suit patient's anatomy.

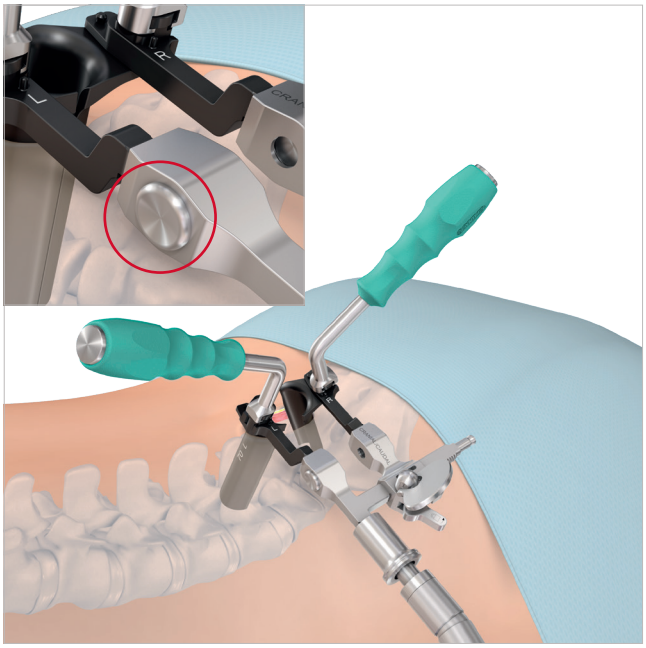

- To reduce the angulation, press the release button on the outside of each retractor frame arm.

▲ Precaution:

- Do not use excessive force to toe the blades.

▲ Warning:

- If it is not possible to toe the blade, make sure the skin and fascia incision is large enough and if not, enlargement may be necessary.

10. Assemble medial/lateral retractor

Instruments	
03.615.500–590	Blade, medial/lateral, narrow, length 40–110 mm
03.615.600–690	Blade, medial/lateral, wide, length 40–110 mm
03.615.002	Retractor Frame, medial/lateral

Select medial/lateral blades according to the length of the already placed cranial/caudal blades.

Depending on patient's anatomy the medial blade may need to be shorter than the lateral blade.

Choose the width of the blades, narrow or wide according to the angulation which was achieved with the cranial/caudal frame.

The total distraction of the retractor is 35 or 45 mm, depending on where the flex arm is attached.

When the cranial/caudal frame is totally retracted and or totally angled, the wider blades are necessary to protect the soft tissue on the side.

Assemble the medial/lateral blades on the medial/lateral frame similar to step 4.

11. Insert medial/lateral retractor

Insert the medial/lateral retractor into the cranial/caudal retractor and into the incision.

Place it such that the medial blades are located medially.

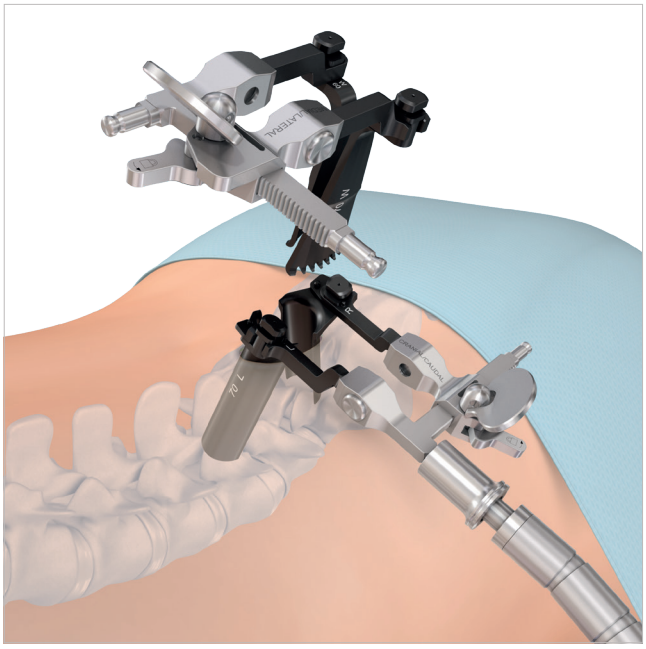

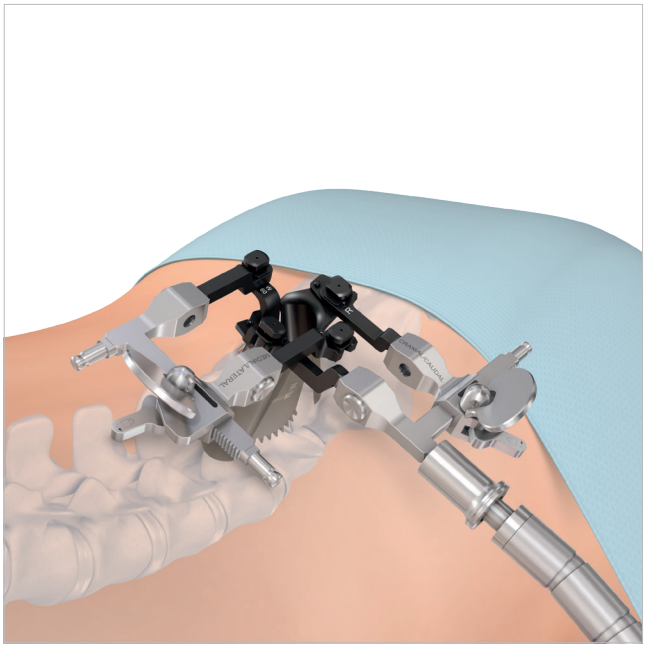

12. Connect frame assembly to flex arm (optional)

If desired, the medial/lateral retractor can be connected to a second flex arm following the steps of step 6.

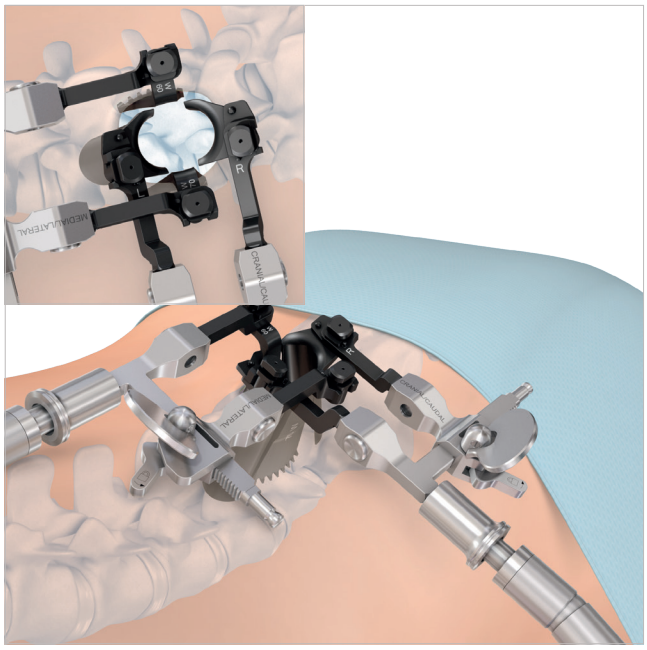

13. Expand and toe medial/lateral retractor

Expand the medial/lateral retractor according to step 7 and toe the blades if needed with the handle according to step 9.

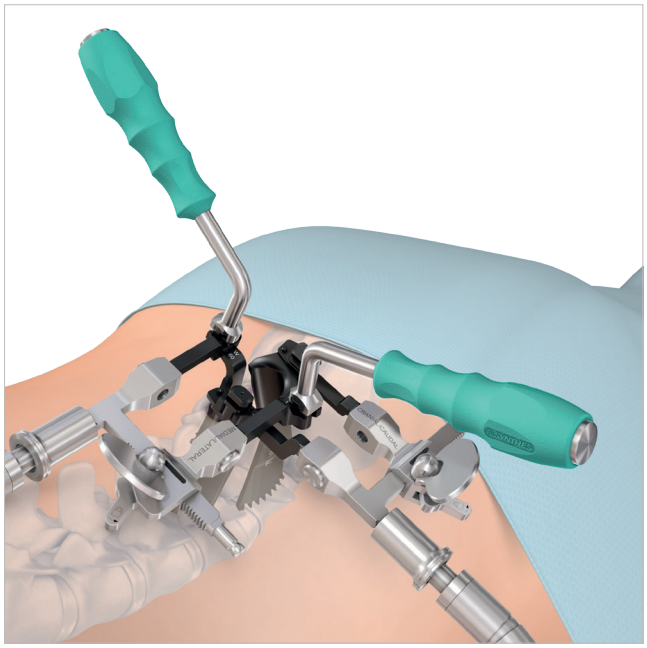

Handheld Retraction

Handheld Retraction (optional)

Instrument	
03.615.003	Handle for Retractor
Optional instrument	
03.615.005	Handle for Retractor, with wide angle

If the medial/lateral retractor is not needed as a fixed installed system, the medial/lateral blades can be used together with the handle as a handheld retractor to provide short term medial/lateral tissue retraction.

Slide the handle over the connection piece of a medial/lateral blade and use it like a Langenbeck retractor.

Indications and Contraindications

Please refer to the corresponding Instructions for Use for specific information on Intended use, Indications, Contraindications, Warnings and Precautions, Potential Adverse Events, Undesirable Side Effects and Residual Risks. Instructions for Use are available at www.e-ifu.com and/or www.depuysynthes.com/ifu.

Bibliography

1. Aebi M, Thalgott JS, Webb JK (1998): AO ASIF Principles in Spine Surgery. Berlin: Springer.
2. Aebi M, Arlet V, Webb JK (2007): AOSPINE Manual (2 vols), Stuttgart, New York: Thieme.

Not all products may currently be available in all markets.
This publication is not intended for distribution in the USA.
Surgical techniques are available as PDF files at www.depuysynthes.com/ifu

Manufactured or distributed by:
Synthes GmbH
Eimattstrasse 3
4436 Oberdorf
Switzerland

Tel: +41 61 965 61 11

www.jnjmedicaldevices.com

Note: For recognized manufacturer, refer to the product label.

© DePuy Synthes 2021. All rights reserved.
SE_842639_AA (036.001.034; DSEM/SPN/0215/0270) EOS: 175265-210428 EMEA.